THIS DRAWING IS UNPUBLISHED. RELEASED FOR PUBLICATION -,- .
© COPYRIGHT - By - ALL RIGHTS RESERVED.

LOC	DIST
GP	00

REVISIONS

P	LTR	DESCRIPTION	DATE	DWN	APVD
	P	REVISED PER ECO-11-004835	11MAR11	RK	HMR

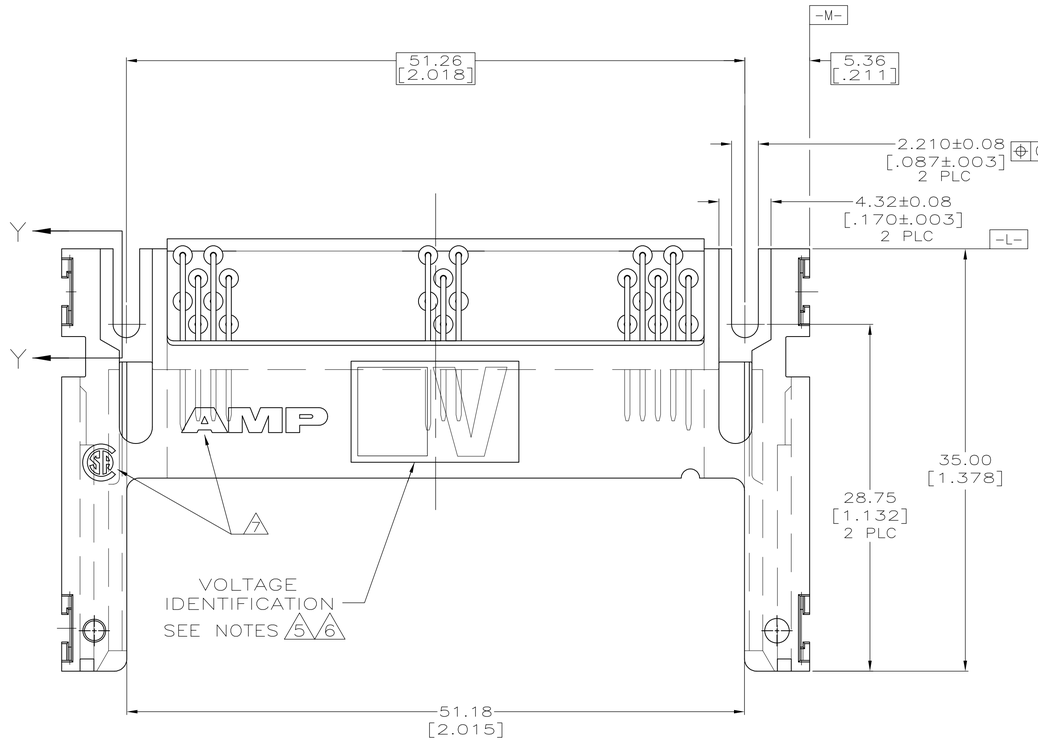

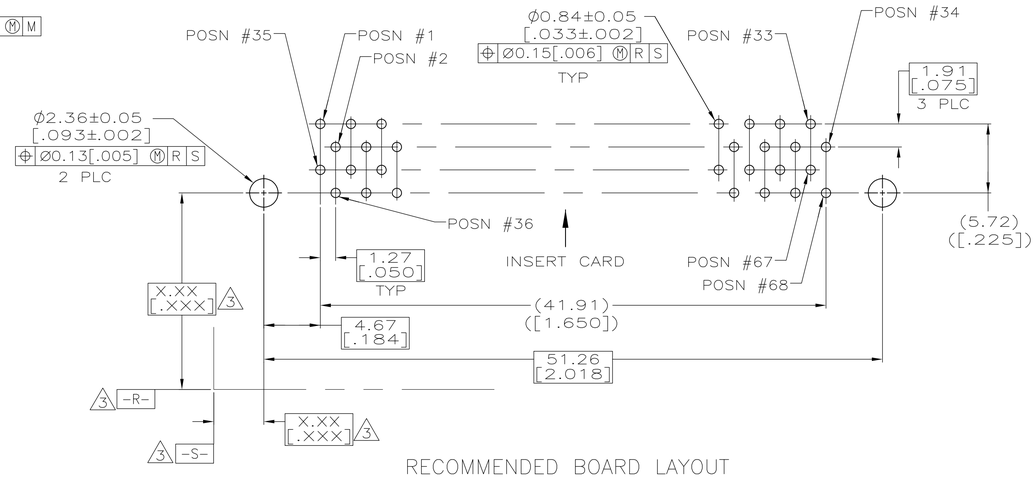

RECOMMENDED BOARD LAYOUT

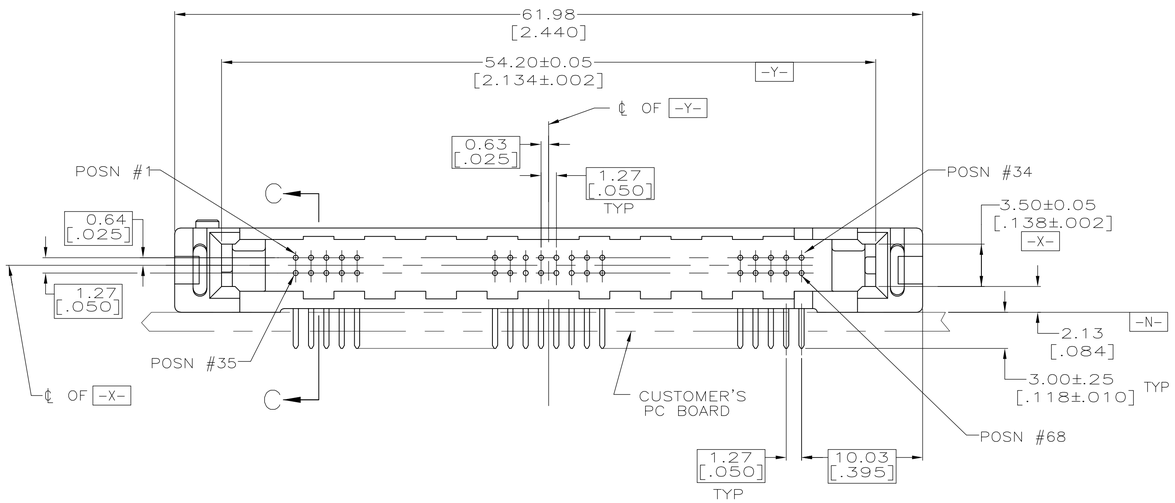

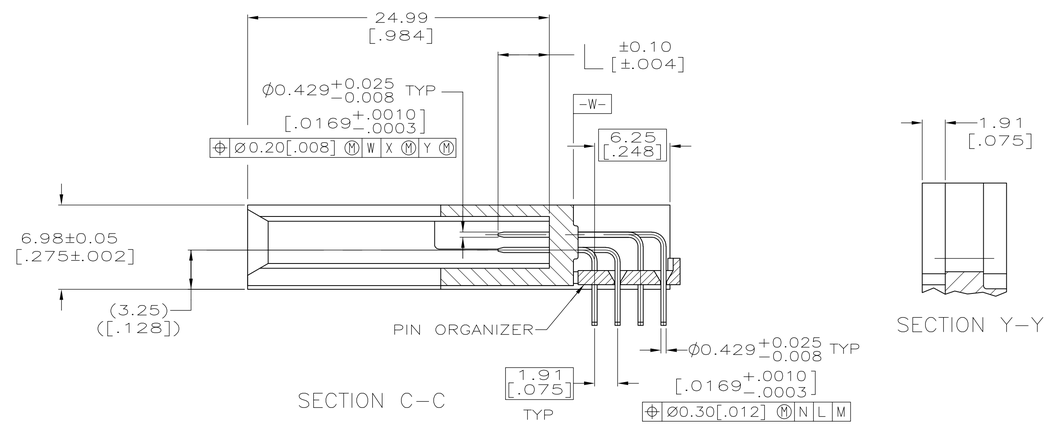

1. CONTACTS: 0.00076[.000030] MINIMUM GOLD IN CONTACT AREA, 0.00381[.000150] MIN TIN ON SOLDER TAILS, ALL OVER 0.00127[.000050] MINIMUM NICKEL
2. CUSTOMER TO PROVIDE CARD GUIDANCE SYSTEM
3. DATUMS AND BASIC DIMENSIONS ESTABLISHED BY CUSTOMER
4. CONNECTOR REQUIRES USE OF 2 – SIZE 2M SCREWS FOR FASTENING TO PRINTED CIRCUIT BOARD
5. ASSEMBLY KEYED FOR 5 VOLT CARDS
6. ASSEMBLY KEYED FOR LOW VOLT CARDS (3.3V)
7. RECESSED AMP AND CSA LOGOS LOCATED ON BOTH SIDES OF HOUSING.
8. MATERIAL: HOUSING & ORGANIZER; LCP, COLOR; BLACK
   CONTACTS; BRASS

6	1,17,34 35,51,68	ALL OTHER PINS	36,67	5535653-2
5	1,17,34 35,51,68	ALL OTHER PINS	36,67	5535653-1
VOLTAGE KEYING & IDENTIFICATION	5.0 [.197]	4.25 [.167]	3.5 [.138]	PART NUMBER
	"L" (PIN LENGTH) AND LOCATION			

COPYRIGHT 2005
TE CONNECTIVITY CORP
ALL RIGHTS RESERVED

THIS DRAWING IS A CONTROLLED DOCUMENT.

DIMENSIONS: mm[INCHES]

TOLERANCES UNLESS OTHERWISE SPECIFIED:
0 PLC ± –
1 PLC ± –
2 PLC ± 0.13 [.005]
3 PLC ± –
4 PLC ± –
ANGLES ± –

MATERIAL 8
FINISH 1

DWN L. VARELA – DOCK5 03-23-05
CHK D.L. GORENC 03-23-05
APVD M. WALMSLEY 03-23-05
PRODUCT SPEC —
APPLICATION SPEC —
WEIGHT 7.3 GRAMS
CUSTOMER DRAWING

TE Connectivity

NAME: PIN HEADER ASSY, 68 POSN, TOP BOARD MTG, THRU-HOLE, AMP MEMORY CARD

SIZE	CAGE CODE	DRAWING NO	RESTRICTED TO
A1	00779	C-5535653	—

SCALE 4:1 SHEET 1 OF 1 REV P

4805 (3/11)

Downloaded from Arrow.com.