THIS DRAWING IS UNPUBLISHED.
VERTRAULICHE UNVEROEFFENTLICHTE ZEICHNUNG
© COPYRIGHT 2017 TE Connectivity Germany GmbH
RELEASED FOR PUBLICATION 2017
FREI FUER VEROEFFENTLICHUNG
ALL RIGHTS RESERVED.
ALLE RECHTE VORBEHALTEN.

MATED WITH:
PASSEND ZU: -

PROJEKT NR.: -

REVISIONS
AENDERUNGEN

P	LTR	DESCRIPTION BESCHREIBUNG	DATE	DWN	APVD
	A1	E-17-014007	21SEP2017	RW	AK
	A2	E-18-011558	19JUL2018	RW	AK
	A3	E-19-003299	08MAR2019	FF	AK
	A4	E-19-014520	23SEP2019	FF	AK

Kodierung nach TE Schnittstellenzeichnung 208-18006 / CODINGS ACC. TE INTERFACE DRAWING 208-18006

CODE A	CODE B	CODE C	CODE J	CODE Z
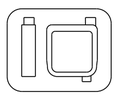	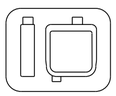	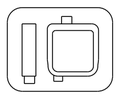	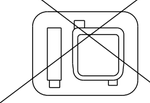	

A4

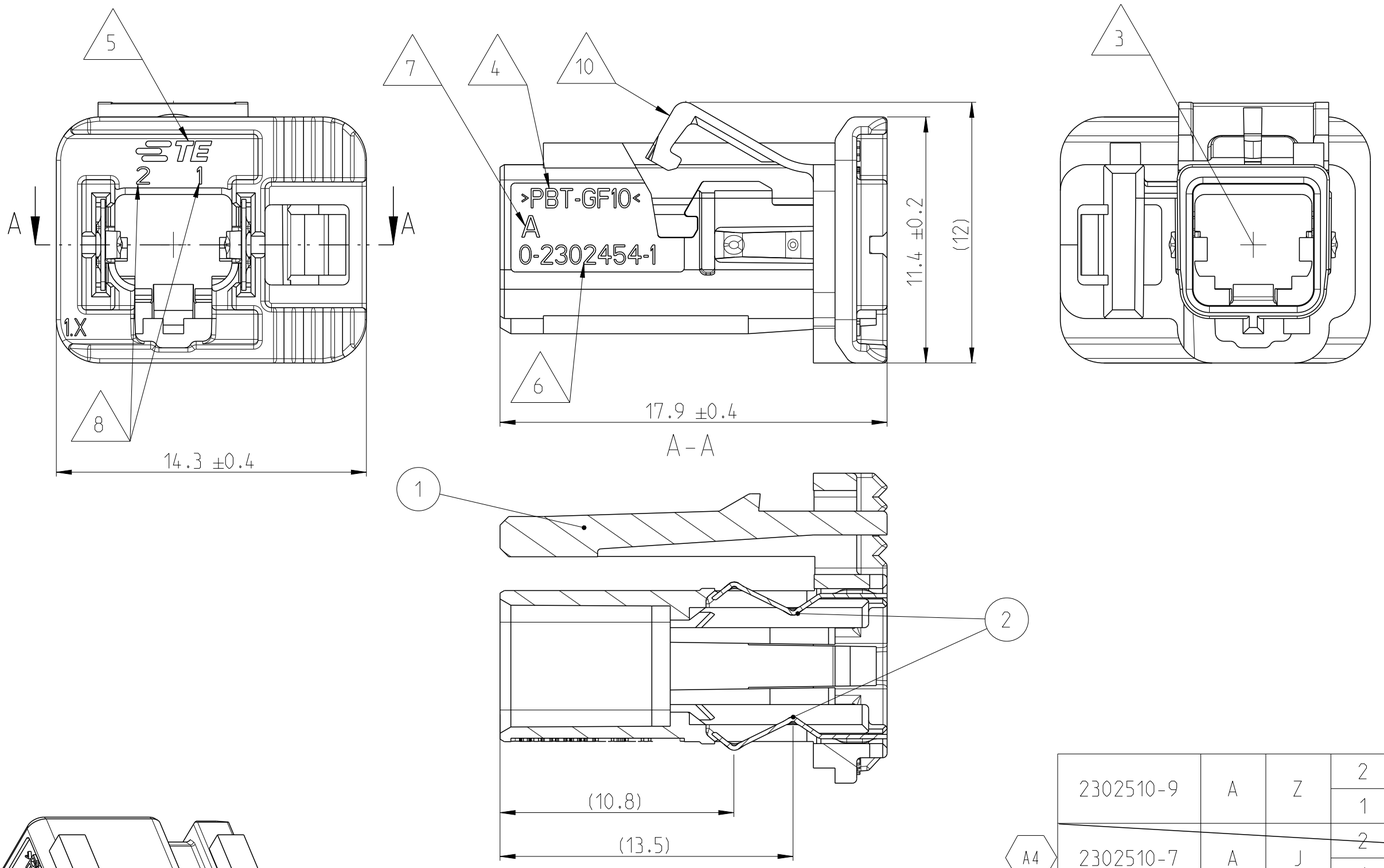

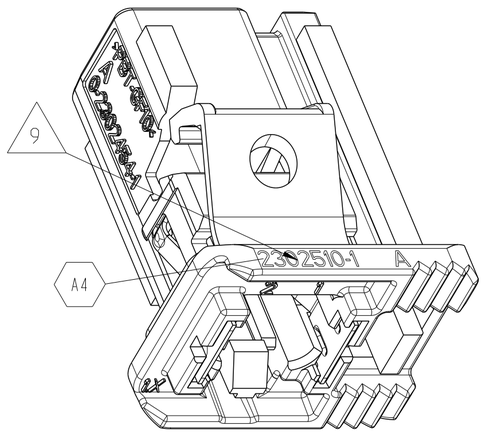

Notizen / NOTES

1 2302510-1 Kodierung A wie dargestellt
2302510-1 CODING A AS SHOWN

2 Passend zu Stiftwanne nach TE-Schnittstellenzeichnung 208-18006
MATING TO PINHEADER ACC. TE-INTERFACE DRAWING 208-18006

3 Kammer fuer MATEnet 2Pos. NanoMQS female Insert module TE PN Y-2302450-X
CAVITY FOR MATEnet 2Pos. NanoMQS FEMALE INSERT MODULE TE PN Y-2302450-X

4 Materialkenzeichnung
MATERIAL MARKING

5 TE-Logo
TE-LOGO

6 TE-PN der Komponente "Single-Port MATEnet Frame"
TE-PN OF COMPONET "SINGLE-PORT MATEnet FRAME"

7 Revisionsstand der Komponente "Single-Port MATEnet Frame"
PART REVISION OF COMPONET "SINGLE-PORT MATEnet FRAME"

8 Kontaktkammernummer
CONTACT CAVITY NUMBER

9 Baugruppen-PN und Rev., aufgedruckt oder gelasert, siehe Tabelle
ASSEMBLY-PN and REV., PRINTED OR LASERMARKED, SEE TABLE

10 Anlieferzustand: 2. Kontaktsicherung geoeffnet
DELIVERY CONDITION: RETAINER IN OPEN POSITION

11 Verpackung: Schuettgut im Beutel im Karton
DELIVERY: LOOSE PIECES IN BAG IN BOX

ASSY PN	REV.	CODE	QTY.	DESCRIPTION	MATERIAL	COLOR/SURFACE SIMILAR RAL	WEIGHT [g]	POS
2302510-9	A	Z	2	MATEnet STP Contact Spring	X10CrNi18-8	Sn	0.9	2
			1	Single-Port MATEnet Frame, Code Z	PBT GF-10	WATER-BLUE 5021		1
~~2302510-7~~	~~A~~	~~J~~	~~2~~	~~MATEnet STP Contact Spring~~	~~X10CrNi18-8~~	~~Sn~~	~~0.9~~	~~2~~
			~~1~~	~~Single-Port MATEnet Frame, Code J~~	~~PBT GF-10~~	~~BEIGE 1001~~		~~1~~
2302510-3	A	C	2	MATEnet STP Contact Spring	X10CrNi18-8	Sn	0.9	2
			1	Single-Port MATEnet Frame, Code C	PBT GF-10	BLUE 5012		1
2302510-2	A	B	2	MATEnet STP Contact Spring	X10CrNi18-8	Sn	0.9	2
			1	Single-Port MATEnet Frame, Code B	PBT GF-10	WHITE 9010		1
2302510-1	A	A	2	MATEnet STP Contact Spring	X10CrNi18-8	Sn	0.9	2
			1	Single-Port MATEnet Frame, Code A	PBT GF-10	BLACK 9011		1

A4

THIS DRAWING IS A CONTROLLED DOCUMENT.

DIMENSIONS: MASSEINHEITEN: mm

TOLERANCES UNLESS OTHERWISE SPECIFIED: ALLGEMEINTOLERANZEN
0 PLC ±0.2
1 PLC ±0.1
2 PLC ±0.1
3 PLC ±-
4 PLC ±-
ANGLES/WINKEL ±1°

MATERIAL: see table -

FINISH/OBERFLAECHE/FARBE: see table -

DWN 19OCT2016 J. Kießwetter
CHK 21OCT2016 R. Wuerker
APVD 21OCT2016 A. Ketteler
PRODUCT SPEC PRODUKTSPEZ. 108-94568
APPLICATION SPEC VERARBEITUNGSSPEZ. 114-94431
WEIGHT GEWICHT see table

TE Connectivity

NAME: Single-Port MATEnet STP Frame Ass'y -

SIZE	CAGE CODE	DRAWING NO ZEICHNUNGS-NR.	RESTRICTED TO NUR FUER
A2	00779	C-2302510	-

CUSTOMER DRAWING /KUNDENZEICHNUNG

SCALE MASSSTAB 5:1 | SHEET BLATT 1 OF VON 2 | REV A4

THIS DRAWING IS UNPUBLISHED.
VERTRAULICHE UNVEROEFFENTLICHTE ZEICHNUNG
© COPYRIGHT 2016 TE Connectivity Germany GmbH
RELEASED FOR PUBLICATION 2016
FREI FUER VEROEFFENTLICHUNG
ALL RIGHTS RESERVED.
ALLE RECHTE VORBEHALTEN.

MATED WITH:
PASSEND ZU: -

PROJEKT NR.: -

REVISIONS
AENDERUNGEN

P	LTR	DESCRIPTION BESCHREIBUNG	DATE	DWN	APVD
	-	SEE SHEET 1	-	-	-

Kodierung nach TE Schnittstellenzeichnung 208-18006 / CODINGS ACC. TE INTERFACE DRAWING 208-18006

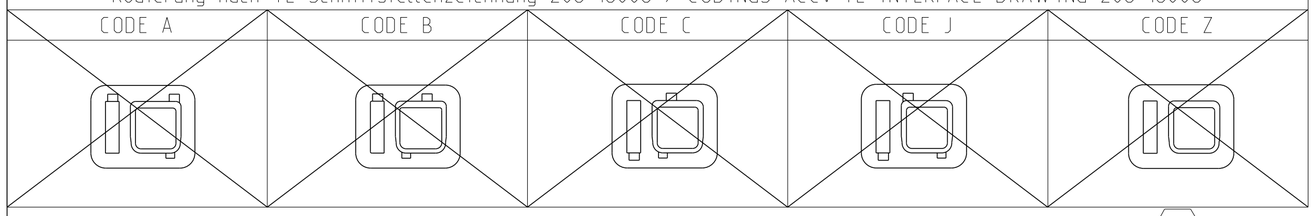

A4

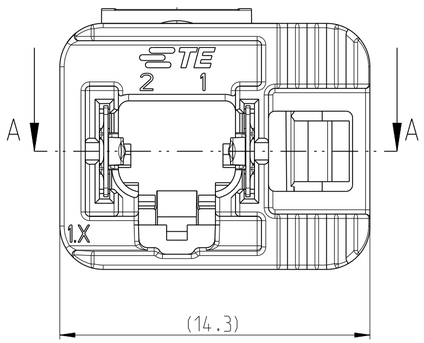

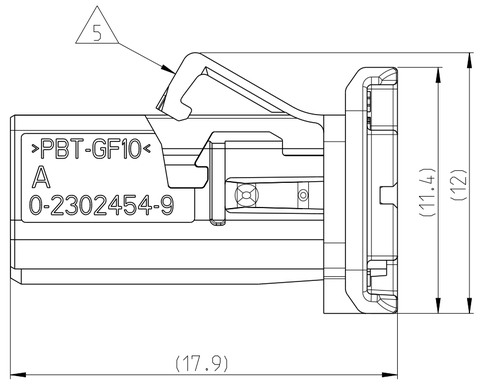

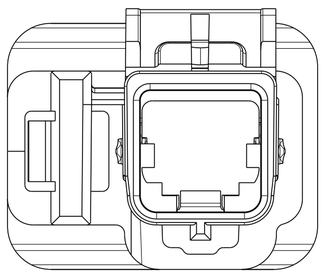

Bemerkungen / NOTES

1 8-2302510-9 wie dargestellt, Kodierung Z
8-2302510-9 AS SHOWN, CODE Z

2 Massgebend ist der deutsche Text
ONLY GERMAN LANGUAGE SHALL BE BINDING

3 Alle Masse in Klammern nur zur Information
ALL DIMENSIONS IN BRACKETS FOR INFORMATION ONLY

4 Verpackung: Karton, Groesse nach Bestellmenge frei waehlbar
PACKAGING: BOX, SIZE TO BE CHOSEN ACC. ORDER QUANTITY

5 Anlieferzustand: 2. Kontaktsicherung geoeffnet
CONDITION OF DELIVERY: RETAINER OPEN

6 Baugruppen-PN und Rev., aufgedruckt oder gelasert, siehe Tabelle
ASSEMBLY-PN and REV., PRINTED OR LASERMARKED, SEE TABLE

A-A

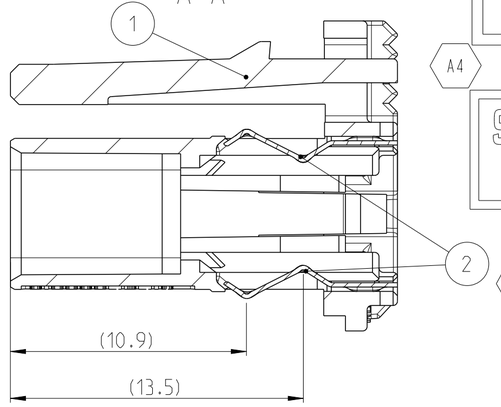

A4

OBSOLETE

A4

SUPERCEDED BY:
2302510-X

NUR FUER B-MUSTER
FOR PROTOTYPE B-SAMPLES ONLY

A4

STATE	ASSY PN	REV.	CODE	QTY.	DESCRIPTION	MATERIAL	COLOR/SURFACE SIMILAR RAL	WEIGHT [g]	POS
OBSOLETE	8-2302510-9	B	Z	2	MATEnet STP Contact Spring	X10CrNi18-8	Sn	0.9	2
				1	Single-Port MATEnet Frame, Code Z	PBT GF-10	WATER-BLUE 5021		1
OBSOLETE	8-2302510-7	A	J	2	MATEnet STP Contact Spring	X10CrNi18-8	Sn	0.9	2
				1	Single-Port MATEnet Frame, Code J	PBT GF-10	BEIGE 1001		1
OBSOLETE	8-2302510-3	A	C	2	MATEnet STP Contact Spring	X10CrNi18-8	Sn	0.9	2
				1	Single-Port MATEnet Frame, Code C	PBT GF-10	BLUE 5012		1
OBSOLETE	8-2302510-2	A	B	2	MATEnet STP Contact Spring	X10CrNi18-8	Sn	0.9	2
				1	Single-Port MATEnet Frame, Code B	PBT GF-10	WHITE 9010		1
OBSOLETE	8-2302510-1	A	A	2	MATEnet STP Contact Spring	X10CrNi18-8	Sn	0.9	2
				1	Single-Port MATEnet Frame, Code A	PBT GF-10	BLACK 9011		1

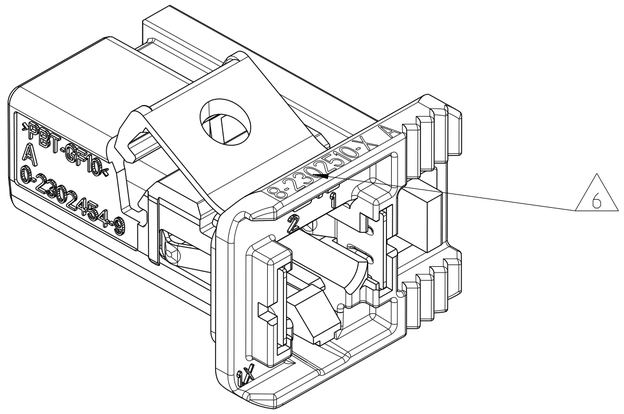

THIS DRAWING IS A CONTROLLED DOCUMENT.

DIMENSIONS: MASSEINHEITEN: mm

TOLERANCES UNLESS OTHERWISE SPECIFIED: ALLGEMEINTOLERANZEN
0 PLC ±0.2
1 PLC ±0.1
2 PLC ±0.05
3 PLC ±-
4 PLC ±-
ANGLES/WINKEL ±1°

MATERIAL: see table -

FINISH/OBERFLAECHE/FARBE: see table -

DWN J. Kießwetter 19OCT2016
CHK R. Wuerker 21OCT2016
APVD A. Ketteler 21OCT2016
PRODUCT SPEC PRODUKTSPEZ. -
APPLICATION SPEC VERARBEITUNGSSPEZ. 114-94431
WEIGHT GEWICHT see table

TE Connectivity

NAME Single-Port MATEnet STP Frame Ass'y -

SIZE A2 | CAGE CODE 00779 | DRAWING NO ZEICHNUNGS-NR. C-2302510 | RESTRICTED TO NUR FUER -

CUSTOMER DRAWING /KUNDENZEICHNUNG | SCALE MASSSTAB 1:1 | SHEET BLATT 2 OF VON 2 | REV A4

Mouser Electronics

Authorized Distributor

Click to View Pricing, Inventory, Delivery & Lifecycle Information:

TE Connectivity:

2302510-9