Downloaded from Arrow.com.

CGA4J3X7R1C475K125AD

TDK Item Description : CGA4J3X7R1C475KT***B

Lead Free | Halogen Free | REACH | RoHS COMPLIANT

Equivalent C2012X7R1C475K for Automotive

Application & Main Feature

Automotive Grade (Counductive Epoxy Application)

Series

CGA4(2012) [EIA CC0805]

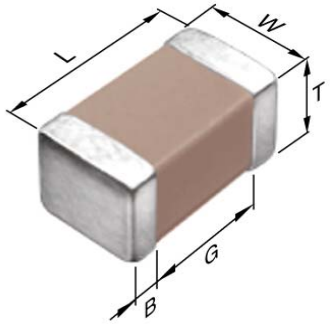

Dimensions

L	2.00mm +0.35,-0.25mm
W	1.25mm +0.3,-0.25mm
T	1.25mm +0.3,-0.25mm
B	0.20mm Min.
G	0.50mm Min.

Temperature Characteristic

X7R (-55 to 125 degC +/-15%)

Rated Voltage

1C (16Vdc)

Capacitance

4.7uF

Capacitance Tolerance

K (+/-10%)

Dissipation Factor

7.5% Max.

Insulation Resistance

21Mohm Min.

AEC-Q200

Yes

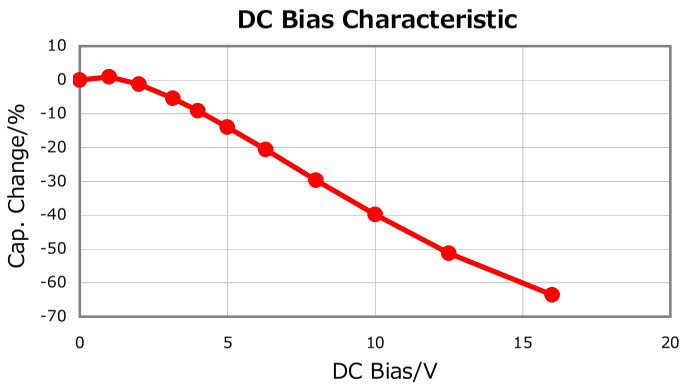

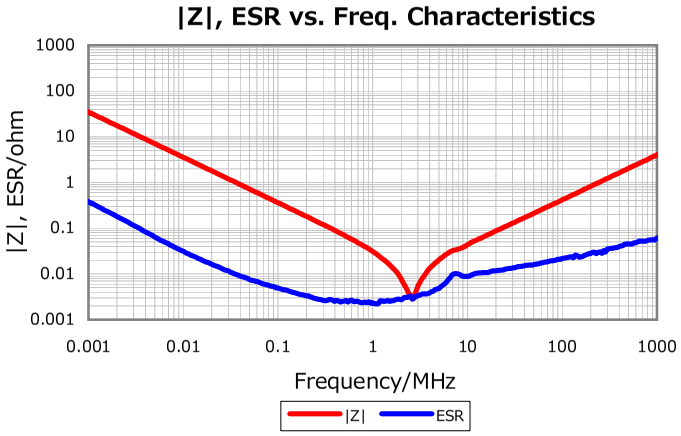

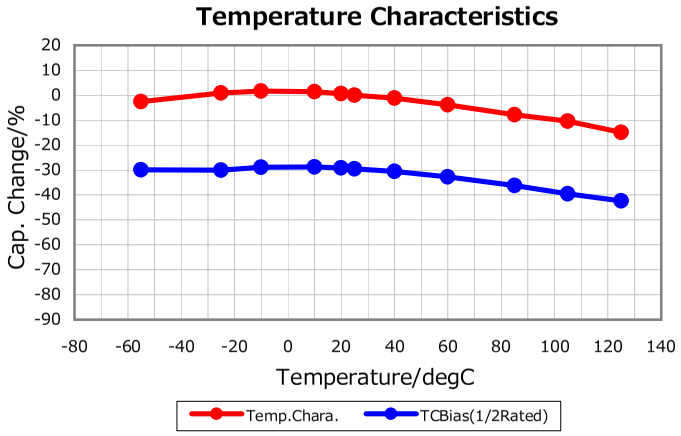

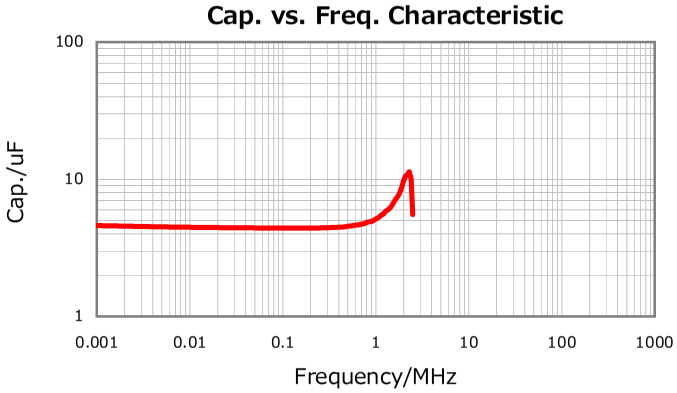

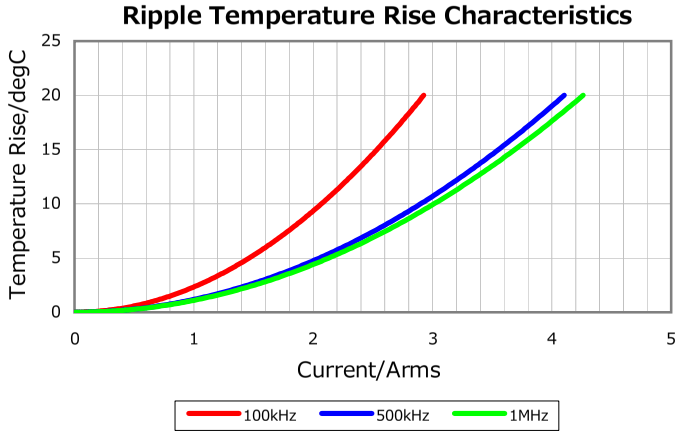

TDK

All specifications are subject to change without notice.

January 4, 2016

Characterization Sheet (Multilayer Ceramic Chip Capacitors)