B
board drillings

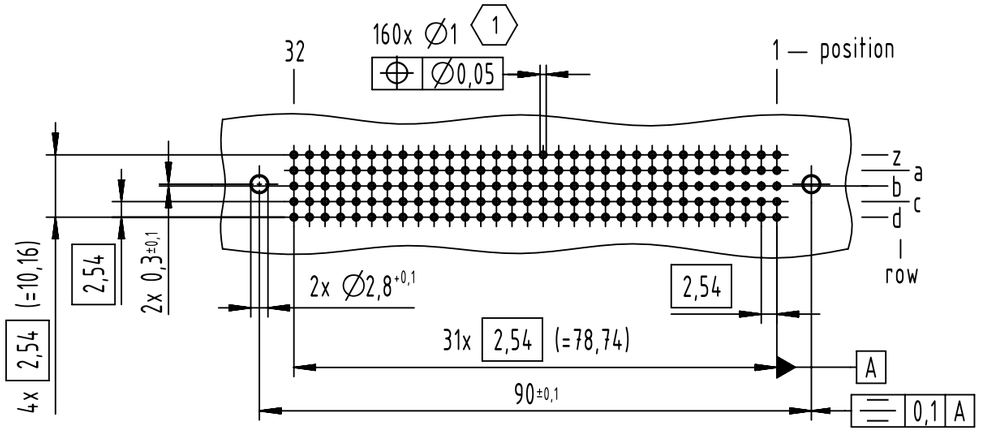

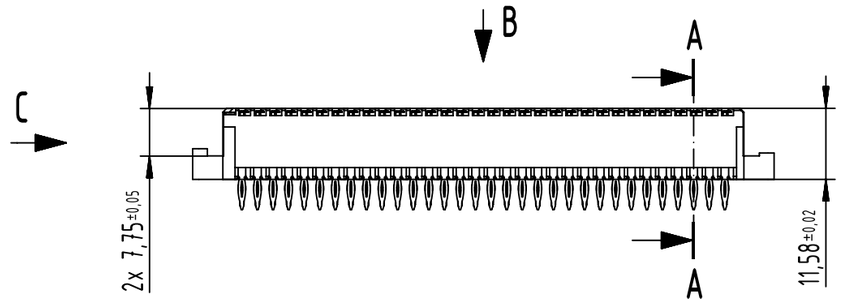

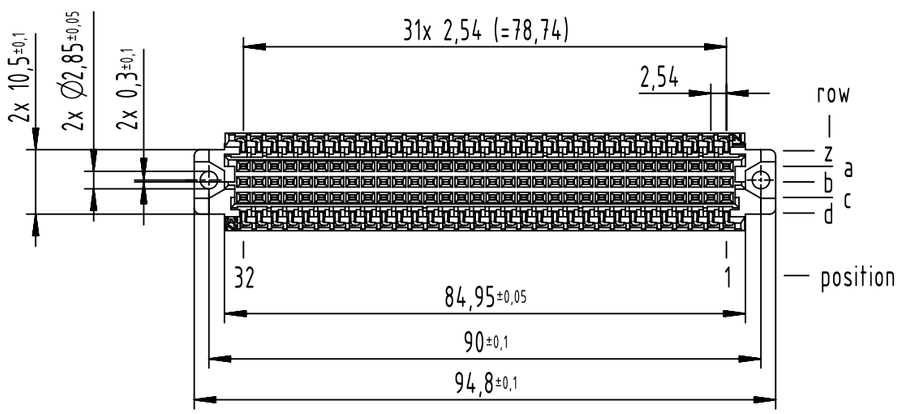

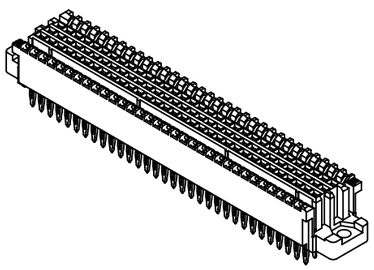

A-A (2:1)

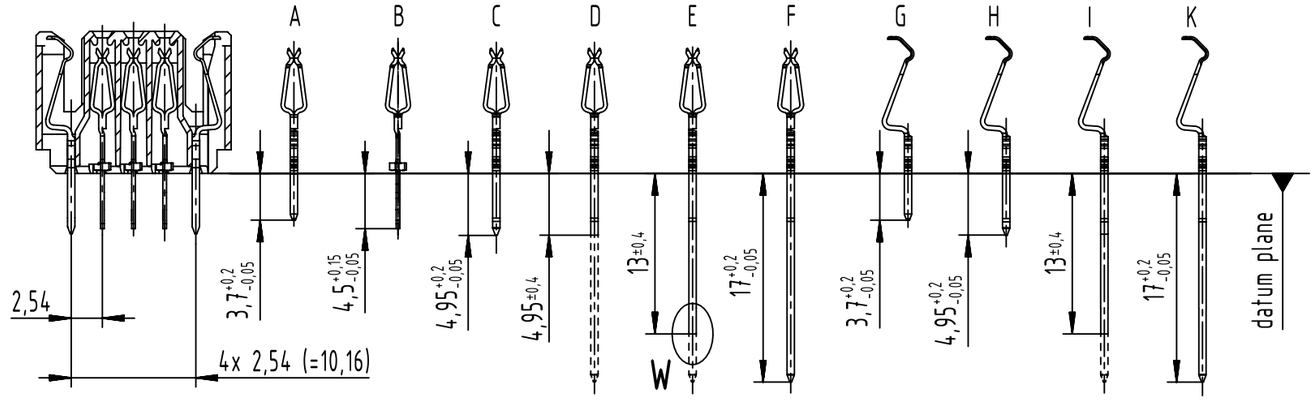

contacts D, E, I sheared

B (2:1)
contact arrangement

□ = position without contact

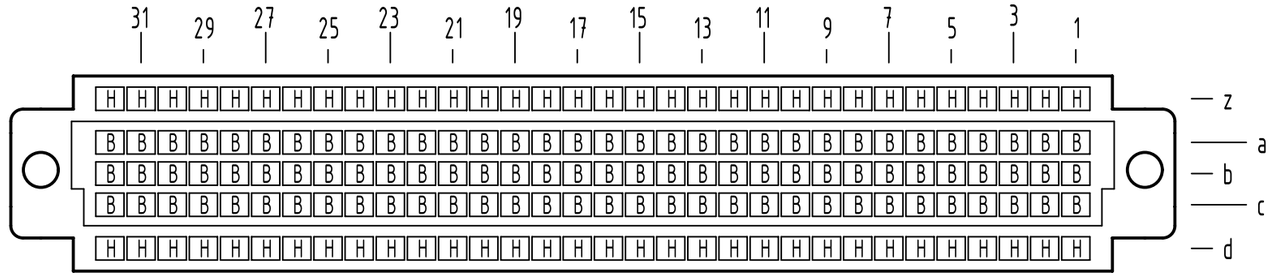

C (2:1)

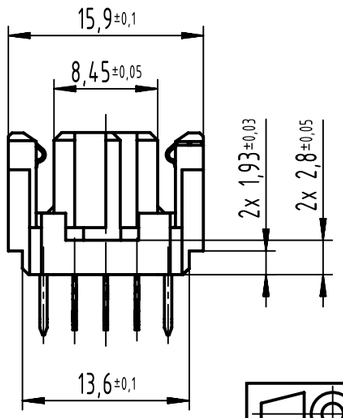

for sheared contacts

W (5:1)

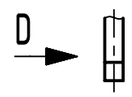

D (5:1)

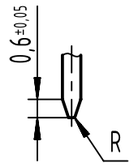

(1) recommended configuration of plated through holes and further information see: DS 02022100101

part no.	performance level (1)
02 02 160 8201	Au50
02 02 160 2201	2
02 02 160 1201	1

All Dimensions in mm
Original Size DIN A3

Scale 1:1

Free size tol. IEC 61076-6-113

Ref.
Sub.

All rights reserved

Department EL PD

HARTING Electronics GmbH
D-32339 Espelkamp

Created by STORCK | Inspected by LEHNERT | Standardisation 302077 | Date 2020-11-27 | State Final Release

Title: har-bus 64 female press-in with flange 160-pole

Doc-Key / ECM-Nr. 100214585/UGD/011/B 500000131790

Type TB | Number 0202160X201 | Rev. B | Page 1/1

A3

Downloaded from Arrow.com.